LG-T2727RGBA-TD-A

SPEC.NO. : SZ19081205
DATE : 2020/05/07
REV. : A/1

Approved By: Checked By: Prepared By:

LIGHT

LG-T2727RGBA-TD-A

TOP Full-color LED

LIGHT

Typical Characteristics Curves

TAmbient 25

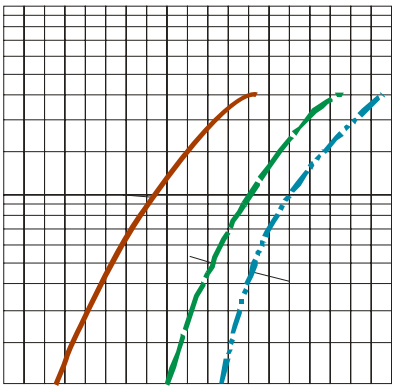

TAmbient 25

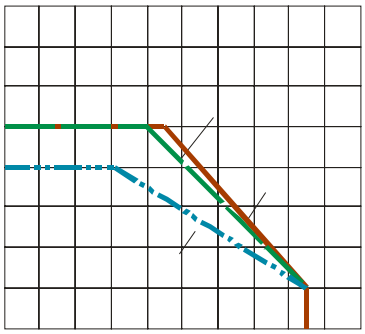

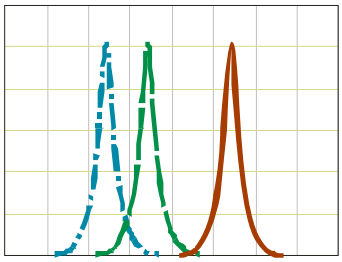

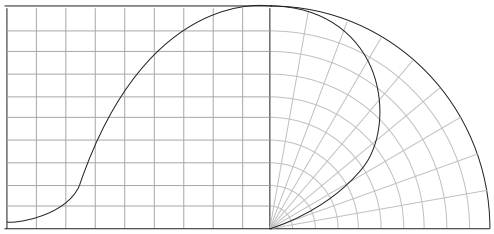

Packaging (1)

✧ **Carrier Tape**

✧ **Details Of Carrier Tape**

✧ **Reel Dimension**

Packaging(2)

✧ **Moisture Proof and Anti-Electrostatic Foil Bag**

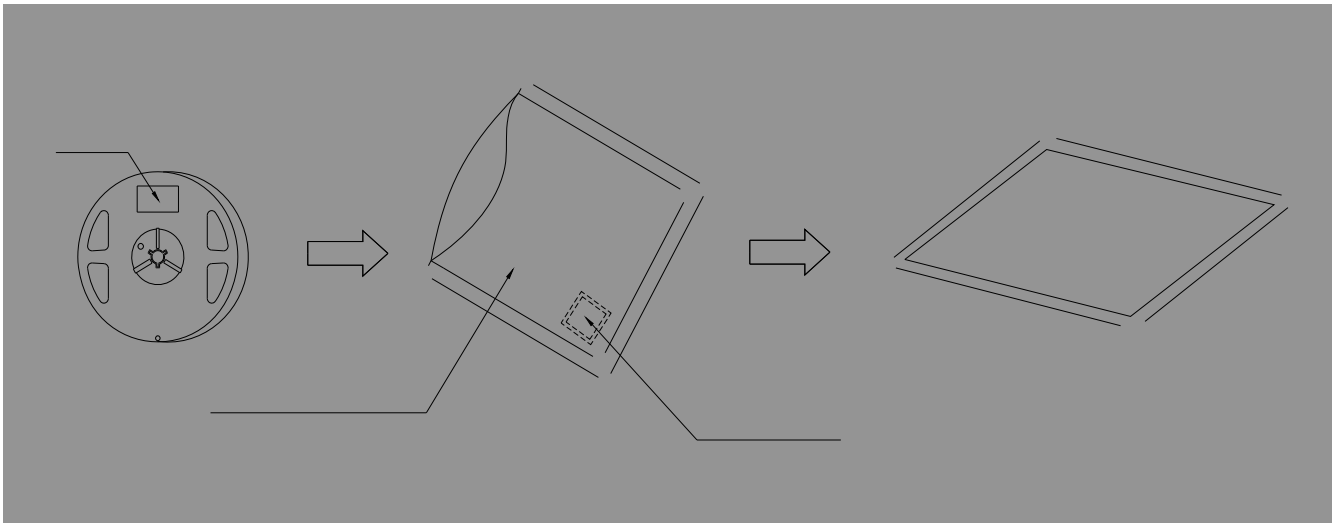

✧ **Cardboard Box**

✧ **Label Explanation**

1

Guideline for Soldering (1)

1.

Hand Soldering

-
-
-
-

Reflow Soldering:

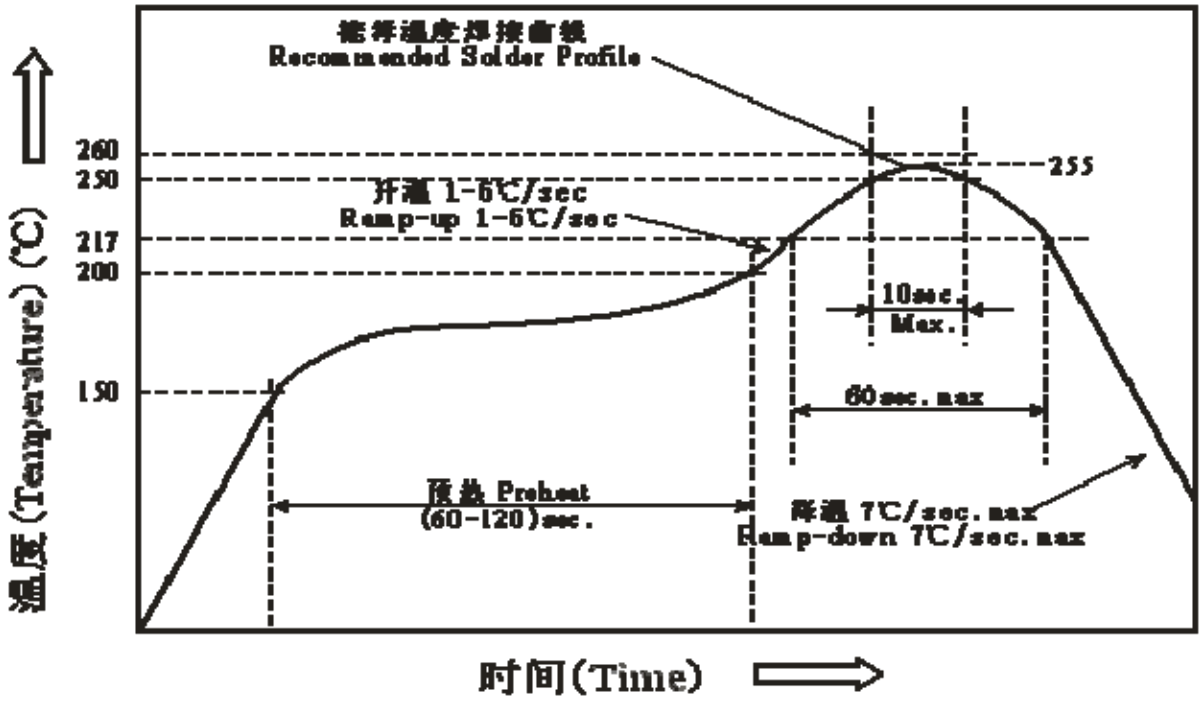

2

Guideline for Soldering (2)

(1)

Precautions (1)

1.

Storage

-
-
-
-
-

2.

Static Electricity

-
-
-

(2)

Precautions (2)

3.

Design Consideration

-

-

(A)

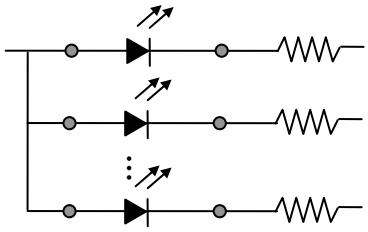

(B)

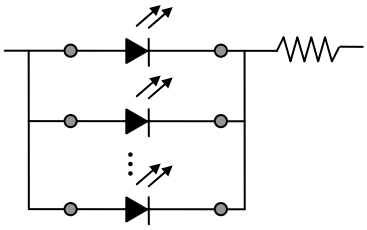

-

4.

Reverse voltage protection

-

-

(3)

Precautions (3)

5.

The safe temperature for LEDs working

-

6.

Others

-

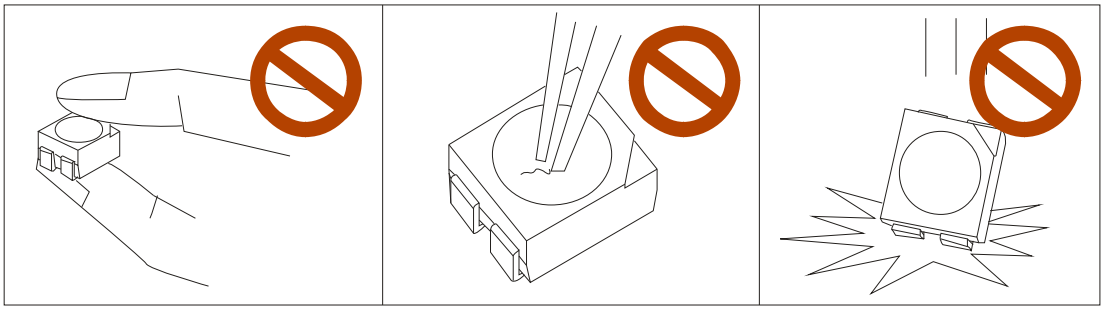

-